OEx

I'm told everything has to end in "x", to be cool!

OpenEducation-x

Brandon Muramatsu

Citation: Muramatsu, B. (2012, April). OEx. Invited Presentation at Tacoma Community College, April 27, 2012.

Flickr @mag3737 cc-by-nc-sa

Outline

- Introductions
- Things that interest me…
- What is this "Open" thing I keep hearing about?
- Let's think about Open differently!
- What's interesting in "Open" today?
- What does this all mean for you?

Outcomes

- **A healthy discussion!**
- Understand the scope of the Open landscape
- Understand current trends and implications of Open
- Identify something to take with you… (hopefully)
  - How will you adopt, produce, or encourage the use of Open?
  - What does Open mean for Tacoma Community College?

5

Introductions

Please introduce yourselves

- Name, department, role

And describe your expectations.

Expectations

- All the newness, the change, would like faculty to be deeply involved
- Understand how to support for the long term
- Find the wealth of open resources
- Help to create their own
- Listen to perceptions about OER, engaging in using and creating open resources
- Institutional barriers—for example CTC not serving all the students they could, how can Open enable that
- Use library resources in courses, learn from courses to work with students and faculty
- How can we do more with OER
- Understand OER better, to help faculty and integrate into their courses
- Exploit everything we know about OER, how does OER improve the lives of the students
- How to help make project more successful

My bonafides…

- B.S. & M.S. in Mechanical Engineering
- Taught multimedia design and open education
- ~10 years developing educational digital libraries NEEDS/SMETE.ORG/MERLOT/NSDL
- ~8 years in Open education
- Worked at UC Berkeley, Cal State University Office of the Chancellor, COSL, MIT
- Work with lots of really smart people all over the world

- Four Letter Words…Been There, Done That
  - Learning Objects, Metadata, Digital Libraries
  - MIT (oh wait)

8

Things that interest me…

Things that interest me

1. Certification and micro-certifications
   - For courses, and for learning concepts
   - P2PU challenges, badges, and so on
2. Modularity and disaggregation of content
3. Content from non-traditional academic sources
   - TED-Ed, MIT+K-12 (Khan Academy collaboration), etc.

Collectively…

- If publishers are being disrupted Open Textbooks
- If faculty and non-faculty are producing OER
- Might traditional certification / accreditation be next?

Things that interest me (cont.)

4. Moving from passive content to active experiences
5. Formative assessment embedded in content
   - Inline, not a separate system / experience
   - Automatically scored (adaptive and customized)
   - Not just for high-stakes testing (e.g., SAT, GRE)

What intrigues me…

- Giving control to students and faculty, moving to individual formative feedback
- Building an assessment player / embedded assessment engine.

Things that interest me (cont.)

6. Streamlined content creation enabling content management on top of simple authoring
   - Workflow, and systems to produce and use materials (I really wish Tom would figure this out for me! :P)

12

What is this “Open” thing I keep hearing about?

What have you heard about "Open"?

- Free
- Shared
- Choices
- Ability to adapt
- Cost effective
- Ability to tailor & build your own
- Creative Commons
- Freedom of info and use
- Quality assurance
- Varied availability by disciplines
- Available to anybody
- Digital
- Often multimedia
- Accessibilty—more accessible to some and less to others

Open… Education

- Source
- Content / Educational Resources
  - CourseWare / Courseware
  - Textbooks
  - Courses
- Educational Practice
- Access / Journals
- Knowledge
- Policy

We're going to focus on these items

What are some benefits and challenges of Open?

Benefits

Challenges

16

Let's think about Open differently!

How do you define "Open Educational Resources"?

OER: l'innovation du jour?

- We're going to talk about OER writ large.
- We're not going to bore you with definitions! (Well, we'll try!)
- We're not going to get all religious about OERs!

Photo: Flickr @_boris cc-by-nc-sa

Photo: Flickr @dullhunk, cc-by

OER: l'innovation du jour?

- I'd like you to think about OER as an entry to a conversation
  - A conversation about teaching, crafting courses, & more importantly **sharing** courses and course materials
  - A conversation about **collaborating** with peers, and even students

This doesn't sound like it's specific to OERs does it?

Poll: Do you…

- Talk about courses with peers?
- Borrow course materials, teaching techniques, sources?
- Share materials back with your peers?
- Provide attribution for what you've borrowed?

OER is all of these things!

- At it's heart, OER is about doing these sorts of things!
- And, it's about encouraging sharing of materials and practices…
- And, it's **clearly communicating what others are allowed to do with the materials**…

Ok, let's get a bit more formal

Photo: Flickr @mringlein, cc-by-nc-nd

OER: A Definition

OER are teaching, learning, and research resources that reside in the public domain or have been released under an intellectual property license that permits their free use or re-purposing by others. Open educational resources include full courses, course materials, modules, textbooks, streaming videos, tests, software, and any other tools, materials, or techniques used to support access to knowledge.

Atkins, Daniel E., John Seely Brown, Allen L. Hammond. (2007-02). "A Review of Open Educational Resources (OER) Movement: Achievements, Challenges, and New Opportunities." Menlo Park, CA: The William and Flora Hewlett Foundation. p. 4.

Going beyond "Traditional" OE"R"

- OERs are a part of Open Education
- OERs focus on resources
  - They have been getting a lot of attention at the federal and state levels
  - They are primarily course materials and open textbooks
  - Many have been developed by academics, colleges and universities
- But, Open Education is the bigger concept
  - Sharing, availability and access

Open Education in the Modern Era

"Open Content"
David Wiley
1998

"Open Educational Resources"
Coined By UNESCO
2002

OpenLearn
(Open University)
2006

OpenCourseWare
Consortium
2008

Open Course Library
2010

Udacity
Coursea
TED-Ed
2012

2001
Wikipedia
Creative Commons
MIT OpenCourseWare

2000s
William and Flora Hewlett Foundation
Support

2007
Cape Town
Declaration

2009
Open High School of Utah
American Graduation Initiative
& $2B in funding
University of the People

2011
MITx

Based upon: WikiEducator. (2012). OER Timeline. http://wikieducator.org/OER_timeline

Importance of Open Education

Open is a means to an end: Improved learning

Potential for…

- Changing the nature of the educational experience
  - Smaller chunks, focused objectives
  - MOOCs, alternate credentialing
- Reigning in costs without sacrificing quality or access
  - Student and institutional
- Reclaiming control
  - From publishers, from static content
  - Enabling flexibility to mix and match

27

Set them 

Creating an OER

Demonstration

Photo: Patrick McAndrew, CC-by

Let's make an OER

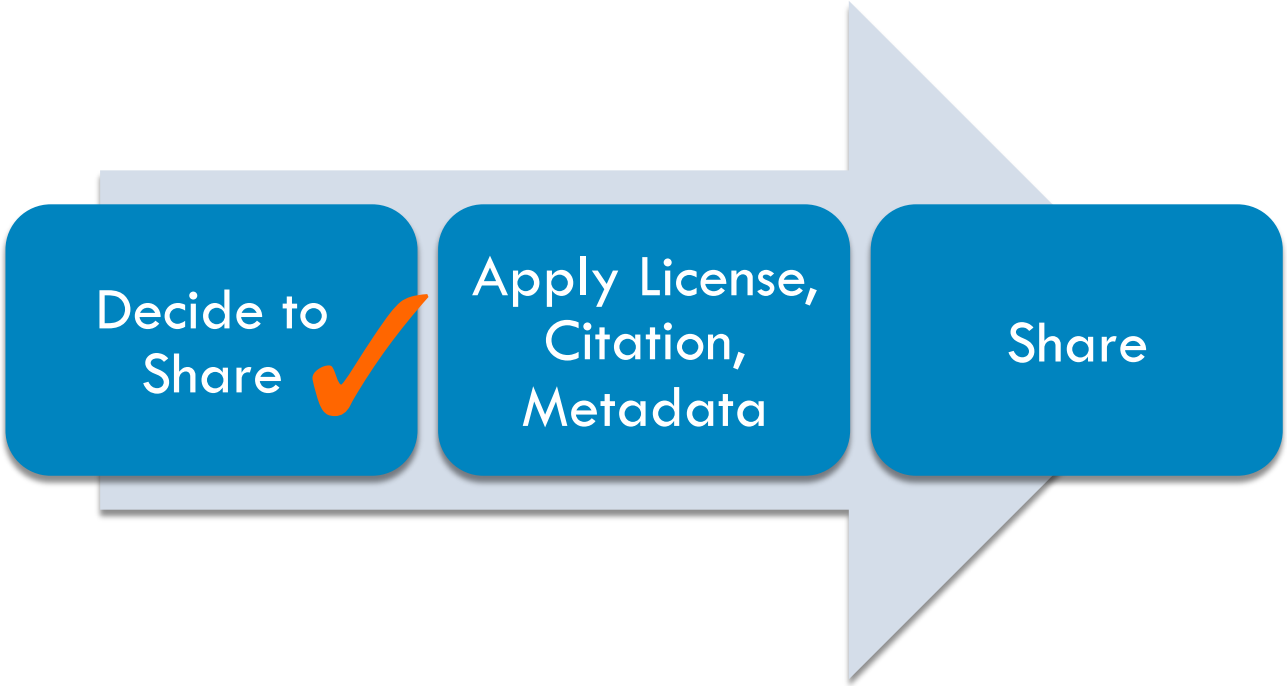

Apply a license, citation and metadata

- Select and add a License
  - Select a Creative Commons license
  - Add Creative Commons logo and/or license statement to the slides
- Add a citation
  - Add to the title slide and final slide
- Add metadata
  - Add metadata to Presentation properties

With a Creative Commons license, **you keep your copyright** but allow people to copy and distribute your work provided they give you credit — and only on the conditions you specify here. For those new to Creative Commons licensing, we've prepared a list of things to think about. If you want to offer your work with no conditions attached, or you want to mark a work that is already free of known copyright restrictions and in the public domain, choose one of our public domain tools.

When you choose a license, we provide you with HTML you can use to add the license information to your site and information on how to select a license on one of several free hosting services that have incorporated Creative Commons. This is not a registration and we do not retain a record of your selection.

Allow commercial uses of your work?

- (•) **Yes**
- ( ) **No**

Allow modifications of your work?

- (•) **Yes**
- ( ) **Yes, as long as others share alike**
- ( ) **No**

Jurisdiction of your license

International

Additional Information

The additional fields are **optional**, but will be embedded in the HTML generated for your license. This allows users of your work to determine how to attribute it or where to go for more information about the work.

Tell us the format of your work: Other

Title of work

Attribute work to name

Attribute work to URL

Choose which style of button you'd like on your webpage:

Here's a preview of how your license will appear on your site:

This work is licensed under a Creative Commons Attribution 3.0 Unported License.

Have your own website?

Copy the text below to your Web site to let your visitors know what license applies to your works.

```
<a rel="license" href="http://creativecommons.org/licenses/by/3.0/"><img alt="Creative Commons License" style="border-width:0" src="http://i.creativecommons.org/l/by/3.0/88x31.png" /></a><br />This work is licensed under a <a rel="license" href="http://creativecommons.org/licenses/by/3.0/">Creative Commons Attribution 3.0 Unported License</a>.
```

Select the contents of the box above and copy it. Or, have it emailed to yourself. **Need more help? Read our tutorial.**

Creative Commons is a non-profit organization.
We need your support to continue providing these tools.
Donate today!

Support

Share your work with an existing community that has enabled Creative Commons licensing.

Learn where to publish your images, audio, video, and text, including blogs.

Offline Work?

To mark a document not on the web, add this text to your work.
Get metadata for documents that support XMP.
Get high resolution and vector versions of the license graphics.
Learn how to mark video and other formats.

Apply a license, citation and metadata

- Select and add a License
  - Select a Creative Commons license
  - Add Creative Commons logo and/or license statement to the slides
- Add a citation
  - Add to the title slide and final slide
- Add metadata
  - Add metadata to Presentation properties

Let's make an OER

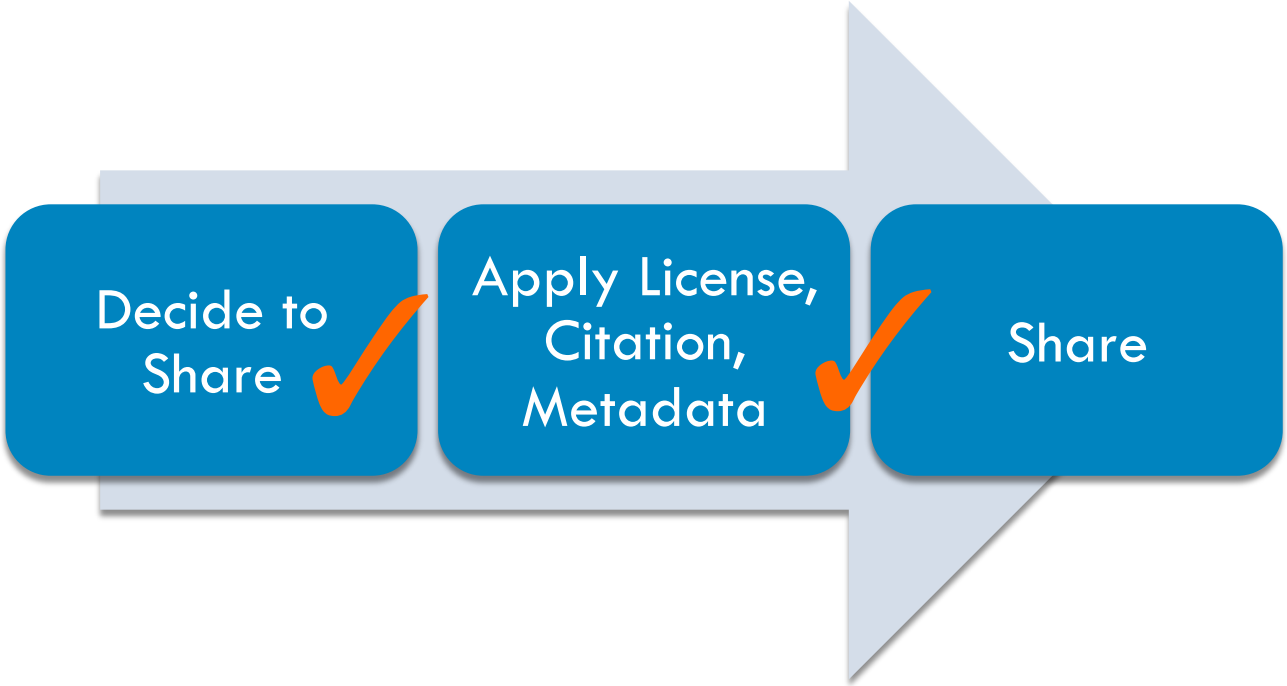

slideshare
Present Yourself

Search | Upload | Go PRO | 0 | Brandon ▼

Feedback

Brandon Muramatsu

SlideShares **51**

Cambridge, MA, United States

Project Manager at MIT

Education

www.mura.org

Brandon Muramatsu has been involved in the development of learning technologies from courseware to educational digital libraries since 1993. He is interested in the development of production-level services and tools for educators and learners to develop, use, reuse and share digital learning resources, especially open educational resources. He is currently working at the Office of Educational Innovation and Technology at MIT to transform learning technologies from innovative research to sustainable production services. Brandon Muramatsu earned his B.S. (1993) and M.S. (1995) in mechanical engineering from the University of California, Berkeley.

×

9 Followers

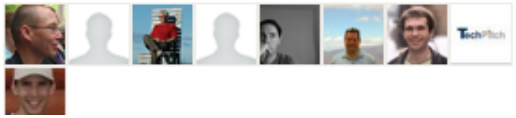

Open Learning: Bridge to Success **613 views**

Student readiness for college is of great concern at the local and national levels. Open access to high-quality educational materials will increase the number and diversity of adults who are

Let's make an OER "That was easy!"

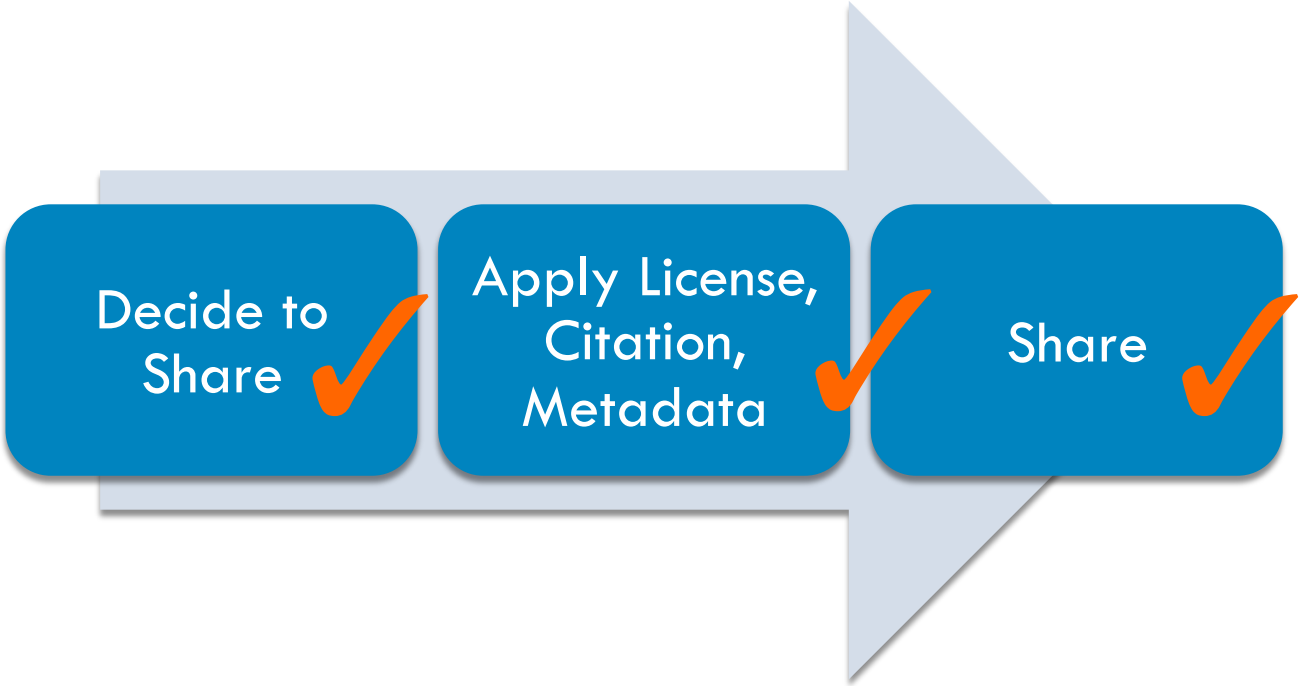

What's interesting in "Open" today?

Disrupting the status quo

OER Smörgåsbord

- Open as a conversation:
  Sharing, access, materials, practice

- Open as a continuum

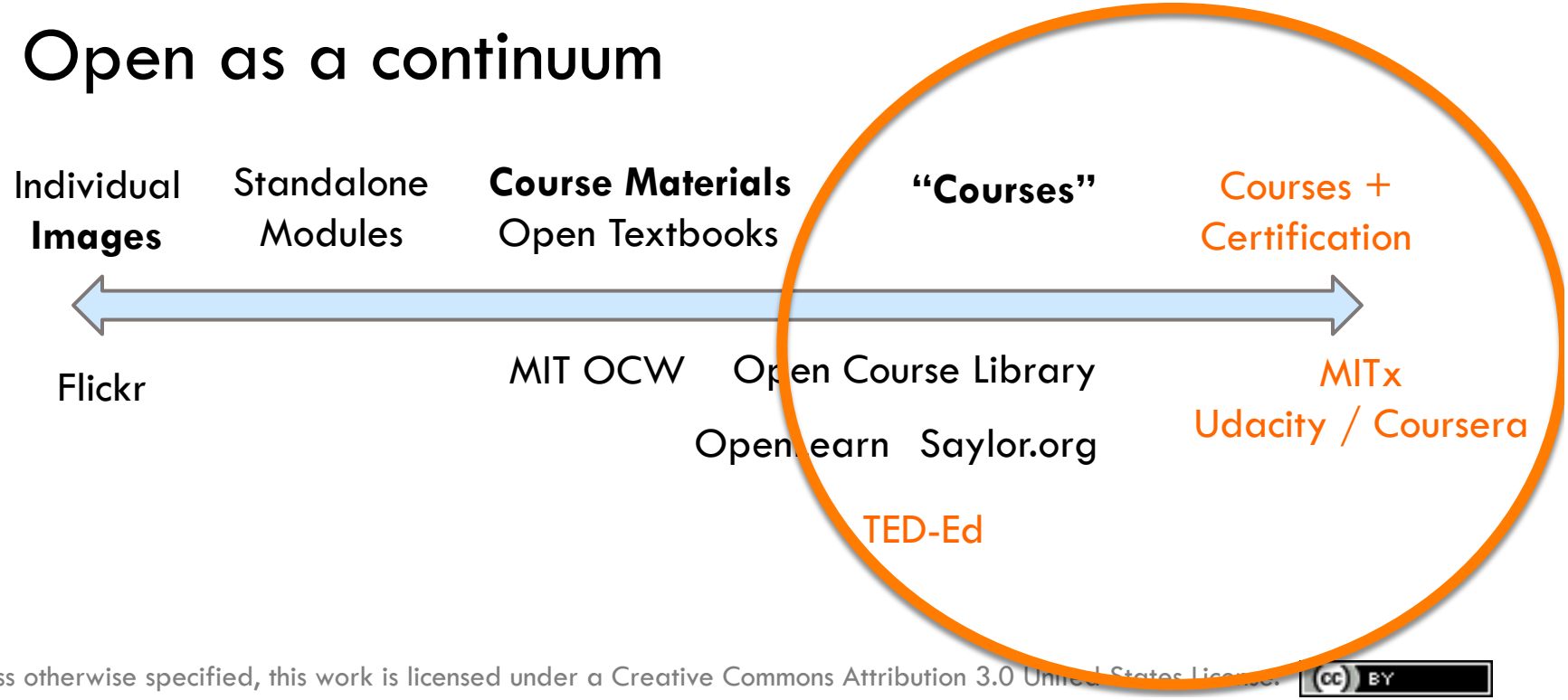

Open Moving Forward

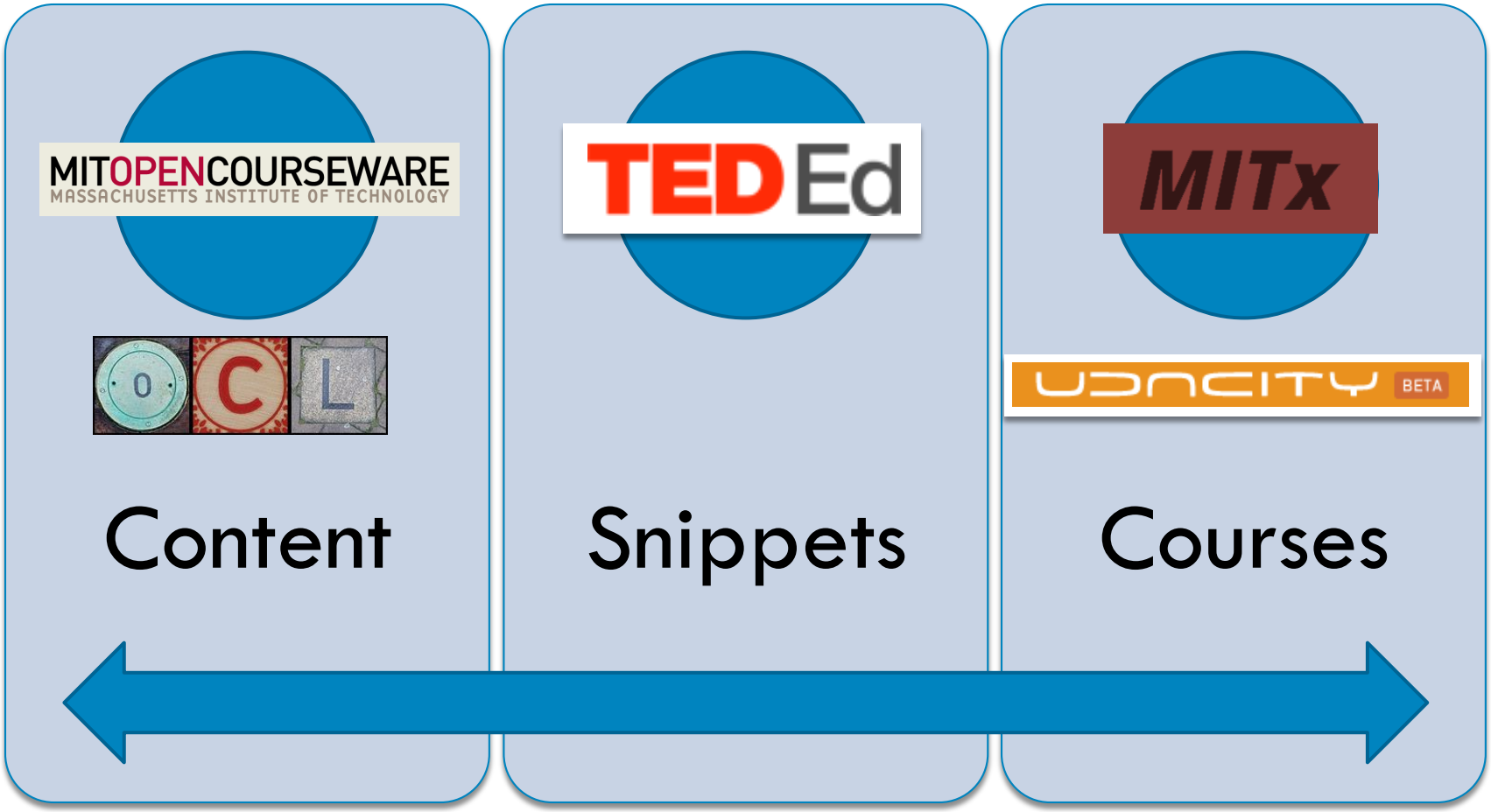

OCL Logo Credits: Timothy Valentine & Leo Reynolds CC-BY-NC-SA

Comparing Open Content to Open Courses

Content (Materials)	Snippets & Courses+
Syllabi, lecture notes & videos	Complete learning experience
Sample homework and exams	Scored homework and exams
Textbooks	Community / discussion
No grade / certificate	Grade / certificate

Washington's Open Course Library

- A collection of openly licensed (CC-BY) educational materials for 81 high-enrollment college courses

  Project Goals:

  - Lower textbook costs for students
  - Improve course completion rates
  - Provide new resources for faculty
  - Please visit: http://opencourselibrary.org

Credit: Timothy Valentine & Leo Reynolds CC-BY-NC-SA

Credit: Tom Caswell, CC BY

Extending Open Content

- Open (Creative Commons License) enables others to build upon the content
- Content: A portion of a course, the materials in a course

www.saylor.org

HARNESSING TECHNOLOGY TO MAKE EDUCATION FREE

Our content is 88% complete

saylor.org
FREE EDUCATION

Search

Saylor.org is a free and open collection of college level courses. There are no registrations or fees required to take our courses, and you will earn a certificate upon completion of each course. Because we are not accredited, you will not earn a college degree or diploma; however, our team of experienced college professors has designed each course so you will be able to achieve the same learning objectives as students enrolled in traditional colleges. More Information

To take a course, select an area of study.

Back to Mathematics

✓ Questions? Consult the FAQ's!

Resource Center

- Readings
- Assignments
- Assessments
- Web Media
- Final Exam

We still need...

- Web Media

Legend

Course Question & Answer

Viewing Saylor.org on an iPad? Click here for tips on optimizing your browsing experience!

99% Precalculus II

Precalculus II continues the in-depth study of functions addressed in Precalculus I by adding the trigonometric functions to your function toolkit. In this course, you will cover families of trigonometric functions, as well as their inverses, properties, graphs, and applications. Additionally, you will study trigonometric equations and identities, the laws of sines and cosines, polar coordinates and graphs, parametric equations and elementary vector operations.

You might be curious how the study of trigonometry, or "trig," as it is more often referred to, came about and why it is important to your studies still. Trigonometry, from the Greek for "triangle measure," studies the relationships between the angles of a triangle and its sides and defines the trigonometric functions used to describe those relationships. Trigonometric functions are particularly useful when describing cyclical phenomena and have applications in numerous fields, including astronomy, navigation, music theory, physics, chemistry, and—perhaps most importantly, to the mathematics student—calculus.

In this course, you will begin by establishing the definitions of the basic trig functions and exploring their properties and then proceed to use the basic definitions of the functions to study the properties of their graphs, including domain and range, and to define the inverses of these functions and establish the properties of these. Through the language of transformation, you will explore the ideas of period and amplitude and learn how these graphical differences relate to algebraic changes in the function formulas. You will also learn to solve equations, prove identities using the trig functions, and study several applications of these functions.

Learning Outcomes

SHOW

Course Overview

EXPAND RESOURCES

Unit 1 | Unit 2 | Unit 3 | Unit 4 | All Units

Unit Outline

SHOW

Unit 1: Trigonometric Functions of Angles

Imagine standing some distance from a building and trying to guess at its height. With some simple measurements and the tools you learn in this unit, you will be able to find the height of the building precisely. This is one of the many application problems you will be able to solve after your study of trigonometry.

In this unit, you will explore the properties of circles and use those properties to investigate angles within the circle. In particular, you will begin with a new definition of angle measure related to arc length in a circle. A review of the equation for a circle with radius r leads to a definition of the sine and cosine functions, and you will use these to define the remaining trigonometric functions and explore their basic properties and identities. These definitions will be used to derive similar definitions for right triangle trigonometry, which is precisely the tool needed to solve problems like the one mentioned above.

Unit 1 Time Advisory show

Unit 1 Learning Outcomes show

1.1 Circles

- Reading: Lippman and Rasmussen's Precalculus: An Investigation of Functions: "Chapter 5: Trigonometric Angles of Functions"

1.1.1 The Pythagorean Theorem

Note: This topic is covered in the reading under subunit 1.1. To learn about the Pythagorean Theorem please focus on the material on page 297.

www.saylor.org

HARNESSING TECHNOLOGY TO MAKE EDUCATION FREE

Our content is 88% complete

saylor.org
FREE EDUCATION

Search

Home » Mathematics » MA003: Precalculus II

Back to Course Overview

✓ Questions? Consult the FAQ's!

Resource Center

- Readings
- Assignments
- Assessments
- Web Media
- Final Exam

We still need...

- Web Media

Legend

Course Question & Answer

Viewing Saylor.org on an iPad? Click here for tips on optimizing your browsing experience!

EXPAND ALL

Assessments

1.2.5 Assessment: Washington State Board for Community and Technical Colleges' "Chapter 5 Quiz 1"

Link: Washington State Board for Community and Technical Colleges' "Chapter 5 Quiz 1" (PDF)

Instructions: This assessment covers subunits 1.1.and 1.2. Complete this quiz after you have worked through the readings, web media, and assignments for subunits 1.1 and 1.2.

See a broken link? Please let us know!

- 1.3.4 Assessment: Washington State Board for Community and Technical Colleges' "Chapter 5 Quiz 2"
- 1.4.3 Assessment: Washington State Board for Community and Technical Colleges' "Chapter 5 Quiz 3"
- 1.5.3 Assessment: Washington State Board of Community and Technical Colleges' "Chapter 5 Quiz 4"
- Assessment: Washington State Board for Community and Technical Colleges' "Chapter 5 Exam 1a"
- 2.1.5.3 Assessment: Washington State Board for Community and Technical Colleges' "Chapter 6 Quiz 5"
- 2.2.4 Assessment: Washington State Board for Community and Technical Colleges' "Chapter 6 Quiz 6"
- 2.5.2 Assessment: Washington State Board of Community and Technical Colleges' "Chapter 6 Quiz 7"

Back to Saylor.org

MA003 Final Exam

Review of attempt 1

Finish review

Started on	Tuesday, March 27, 2012, 08:00 PM
Completed on	Tuesday, March 27, 2012, 08:02 PM
Time taken	2 mins 8 secs
Marks	1/50
Grade	**0.2** out of a maximum of 10 (**2%**)

1
Marks: 1

If $\sin\theta = \frac{4}{5}$, find (i) $\cos\theta$ and (ii) $tan\theta$.

Choose one answer.

- A. $\cos\theta = -\frac{3}{5}, tan\theta = -\frac{4}{3}$
- B. $\cos\theta = \frac{3}{5}, tan\theta = \frac{4}{3}$
- C. $\cos\theta = -\frac{3}{4}, tan\theta = -\frac{3}{5}$
- D. $\cos\theta = \frac{3}{4}, tan\theta = \frac{3}{5}$

Incorrect

Marks for this submission: 0/1.

2
Marks: 1

Find the reference angle for an angle of measure $\frac{13}{5}\pi$.

Choose one answer.

- A. $-\frac{3}{5}\pi$
- B. $\frac{3}{5}\pi$ ✓
- C. $\frac{13}{5}\pi$
- D. $-\frac{13}{5}\pi$

Correct

Non-traditional producers of OER

- Have you heard of TED?
- Have you seed TED-Ed?
  http://education.ted.com

education.ted.com

« Back to TED.com

Register | Sign In

TED Ed Beta Lessons Worth Sharing

Tour Get Involved About

Browse by **Featured** Series Subject YouTube

62 Videos
785 Flips
Learn More »

Take the TED-Ed tour!

education.ted.com

« Back to TED.com

Register | Sign In

TED Ed Beta Lessons Worth Sharing

Tour Get Involved About

Browse by Featured Series Subject YouTube

Peter Donnelly shows how stats fool juries

489 Lesson Views 4 Flips

Watch

Quick Quiz

Think

Dig Deeper

education.ted.com

« Back to TED.com

Register | Sign In

TEDEd Beta Lessons Worth Sharing

Tour Get Involved About

Browse by Featured Series Subject YouTube

Peter Donnelly shows how stats fool juries

489 Lesson Views 4 Flips

1 2 3 4 5

Donnelly's coin toss experiment demonstrates which of the following?

A On average, it takes more coin tosses to see the HTH (head-tail-head) pattern than it does to see HTT

B B) The HTT pattern, on average, requires more coin tosses than HTH

C C) The average number of tosses to get HTT is the same as the number to get HTH

D D) There are people out there with a lot of coins and a lot of time

Watch

Quick Quiz

Think

Dig Deeper

education.ted.com

« Back to TED.com

Register | Sign In

TED Ed Beta Lessons Worth Sharing

Tour Get Involved About

Browse by Featured Series Subject YouTube

Peter Donnelly shows how stats fool juries

489 Lesson Views 4 Flips

Additional Resources for you to Explore

Recruit a few friends and try Donnelly's coin toss experiment yourself. Do you get the same result?

Follow up on the Sally Clark case. Begin with her conviction in 1999 and research what happened to Clark and the other key people involved. Did the case catalyze any legal reforms in Britain (or elsewhere)? You might begin your research by constructing a timeline from available news reports; search for "Sally Clark 1999" in the archives of one or more of the following:

The Guardian http://www.guardiannews.com/

The Telegraph http://www.telegraph.co.uk/

Watch

Quick Quiz

Think

Dig Deeper

TE

« Back to TED-Ed Homepage

Brandon Muramatsu | Sign Out

Create Your Lesson

Customize this lesson by editing or excluding any section below. You can title your lesson, provide context for the video, add or remove questions, and end the lesson with additional resources.

Preview

Publish

- Fl lly sh

Let's Begin…

Peter Donnelly shows how stats fool juries

CREATED BY **BRANDON MURAMATSU** USING **TED**Ed Beta

38 Characters Available

ADD A LINK UNLINK

Oxford mathematician Peter Donnelly reveals the common mistakes humans make in interpreting statistics -- and the devastating impact these errors can have on the outcome of criminal trials. Peter Donnelly is an expert in probability theory who applies statistical methods to genetic data -- spurring advances in disease treatment and insight on our evolution. He's also an expert on DNA analysis, and an advocate for sensible statistical analysis in

-64 Characters Available

Select or deselect questions.

EXCLUDE

Donnelly's coin toss experiment demonstrates which of the following?

1. On average, it takes more coin tosses to see the HTH (head-tail-head) pattern than it does to see HTT
2. B) The HTT pattern, on average, requires more coin tosses than HTH
3. C) The average number of tosses to get HTT is the same as the number to get HTH
4. D) There are people out there with a lot of coins and

What do re

1. They inhibit
2. T DN patterns of A
3. They cause
4. They catalyz

Watch

Quick Quiz EXCLUDE

Think EXCLUDE

Dig Deeper EXCLUDE

…And Finally EXCLUDE

Preview

Publish

Comparing Open Content to Open Courses

Content (Materials)	Courses+
Syllabi, lecture notes & videos	**Complete learning experience**
Sample homework and exams	**Scored homework and exams**
Textbooks	**Community/discussion**
No grade / certificate	Grade / **certificate**

http://mitx.mit.edu/

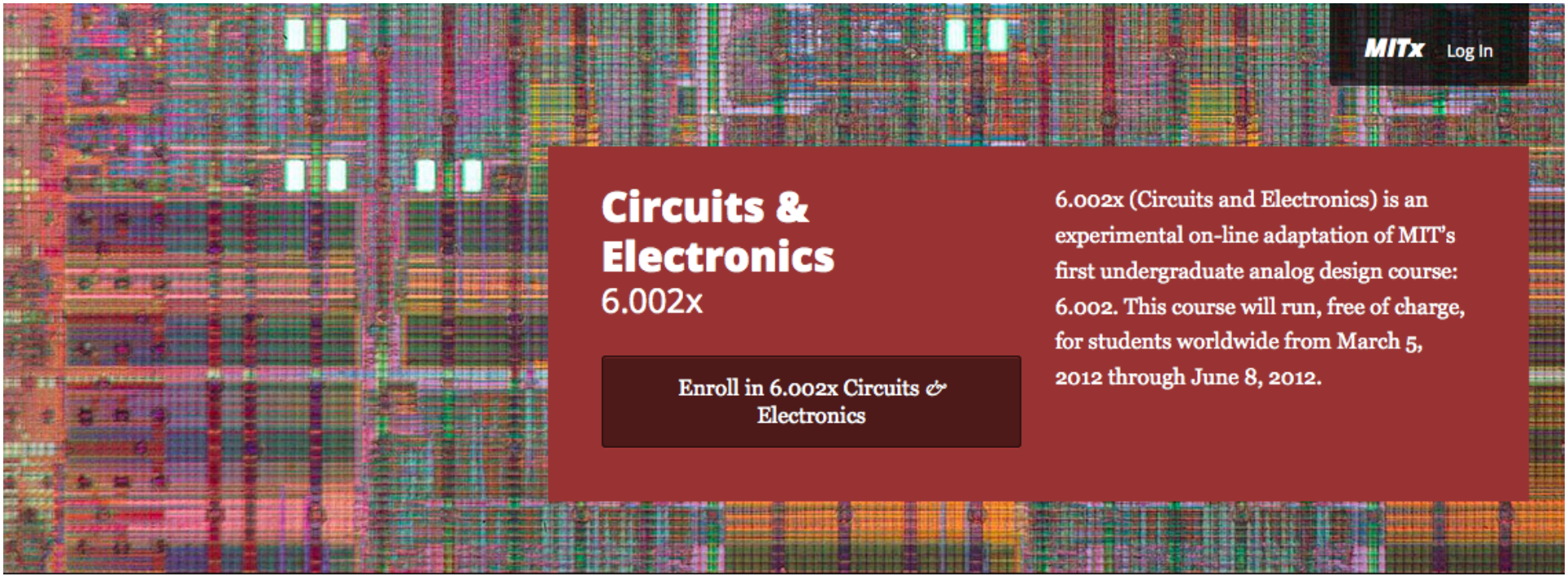

About 6.002x

6.002x (Circuits and Electronics) is designed to serve as a first course in an undergraduate electrical engineering (EE), or electrical engineering and computer science (EECS) curriculum. At MIT, 6.002 is in the core of department subjects required for all undergraduates in EECS.

The course introduces engineering in the context of the lumped circuit abstraction.

6.002x on *MITx*

If you successfully complete the course, you will receive an electronic certificate of accomplishment from *MITx*. This certificate will indicate that you earned it from *MITx's* pilot course. In this prototype version, *MITx* will not require that you be tested in a testing center or otherwise have your identity certified in order to receive this certificate.

The course uses the textbook Foundations of

ABOUT THE COURSE STAFF

Anant Agarwal

Director of MIT's Computer Science and Artificial Intelligence Laboratory (CSAIL) and a professor of the Electrical Engineering and Computer Science department at MIT. His research focus is in parallel computer architectures and cloud software systems, and he is a founder of several

http://mitx.mit.edu/

MITx · Circuits and Electronics | Courseware | Course Info | Textbook | Discussion | Wiki | Profile

Courseware Index

- Overview
- Week 1
  - **Administrivia and Circuit Elements**
    Lecture Sequence
  - Circuit Analysis Toolchest
    Lecture Sequence
  - Basic Circuit Analysis
    Homework due March 18
  - Resistor Divider
    Lab due March 18
  - Week 1 Tutorials
    Tutorial Index
- Week 2
- Week 3
- Week 4
- Week 5

S1V12: Lumped Element Abstraction

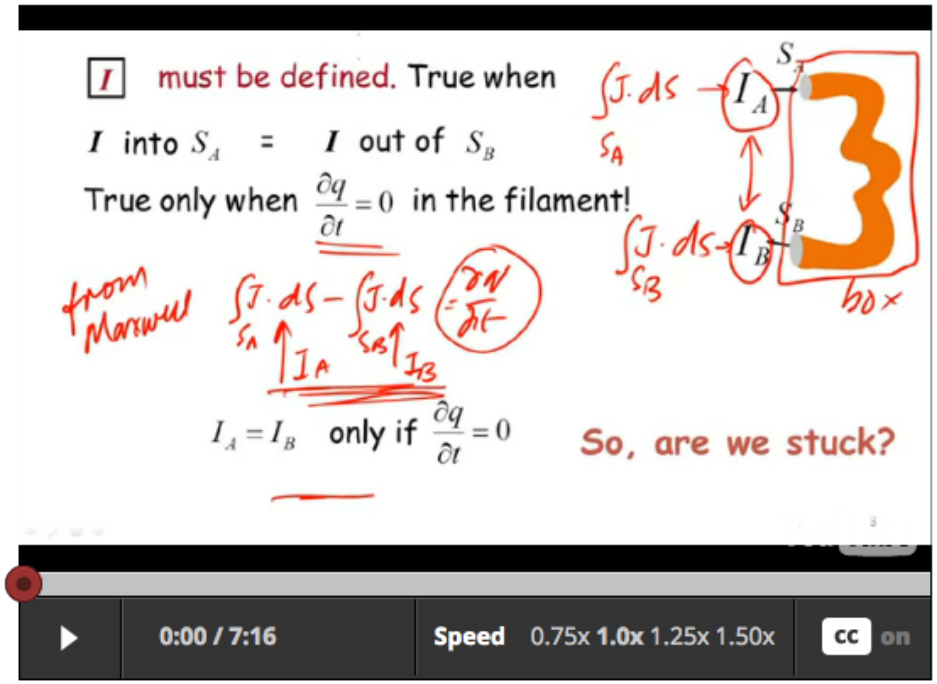

SPEAKER 1: OK, so let me give you the trick.

How do we become unstuck?

So the real trick is that, remember, we are engineers.

We are not required to study exactly what is.

Our goal is to build interesting systems.

We are allowed to make changes to the playground.

the golf course, we, as engineers,

More information given in the text.

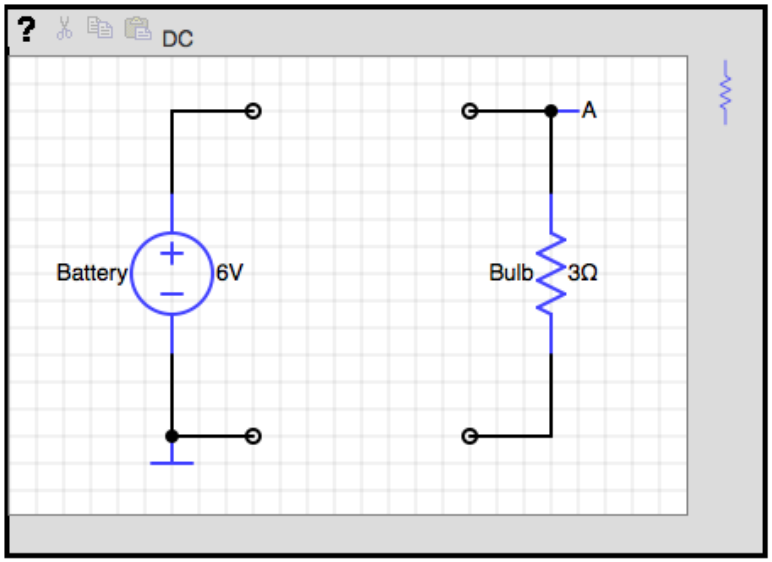

Schematic model when bulb is disconnected:

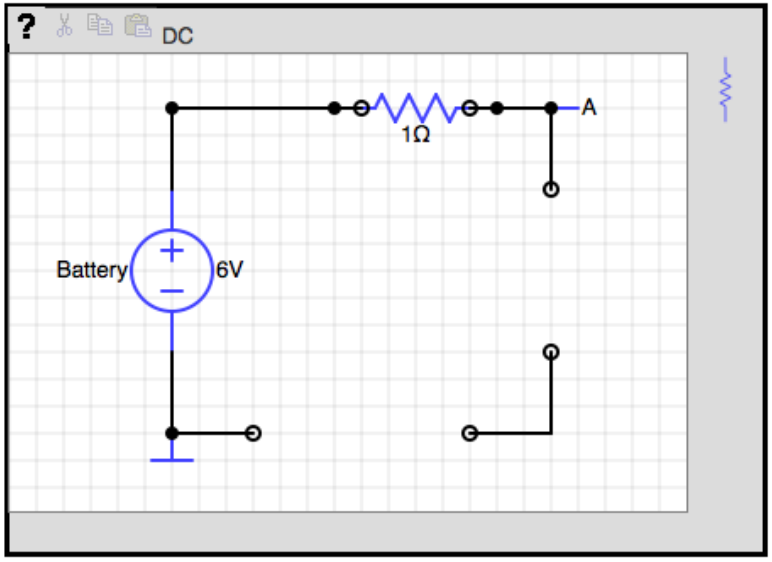

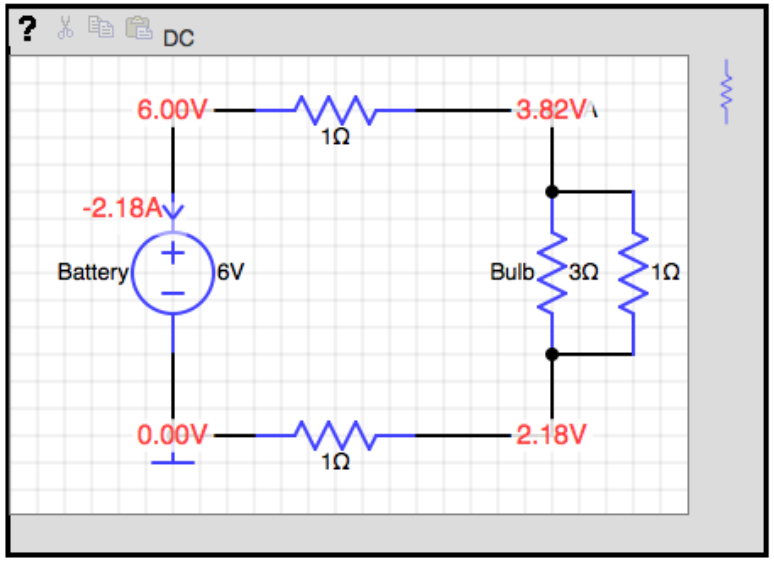

Schematic model when bulb is disconnected:

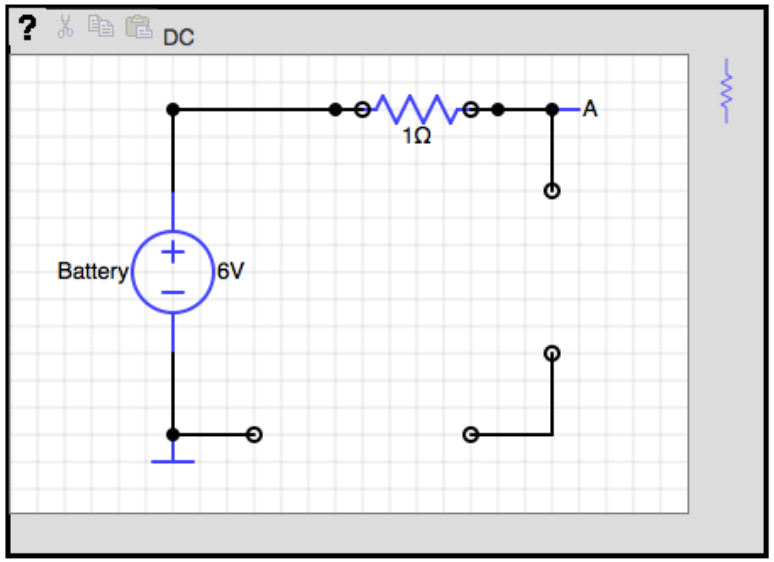

Is it innovative? Or is it the right time?

- Is it a typical online course?
- Video + transcript (not caption)
- Online, self-scored…
  - Homework, customized questions
  - Online labs, customized
- Open to the world
  - Class size 150,000 students (20,000 persisting)
  - Two faculty & 4 TAs
- Certificate upon successful completion

What does this all mean for you?

What does this all mean for you?

- What are your unique contributions?
- What does a move from content -> courses mean?
- What could you do to build upon / take advantage of the open courses that are being developed?
- What does a modular curriculum look like for you? What does it mean to produce small chunks of material and weave them together?

Contact Me

Brandon Muramatsu

mura@mit.edu

@bmuramatsu (Twitter, Slideshare)

www.mura.org